HERMAN

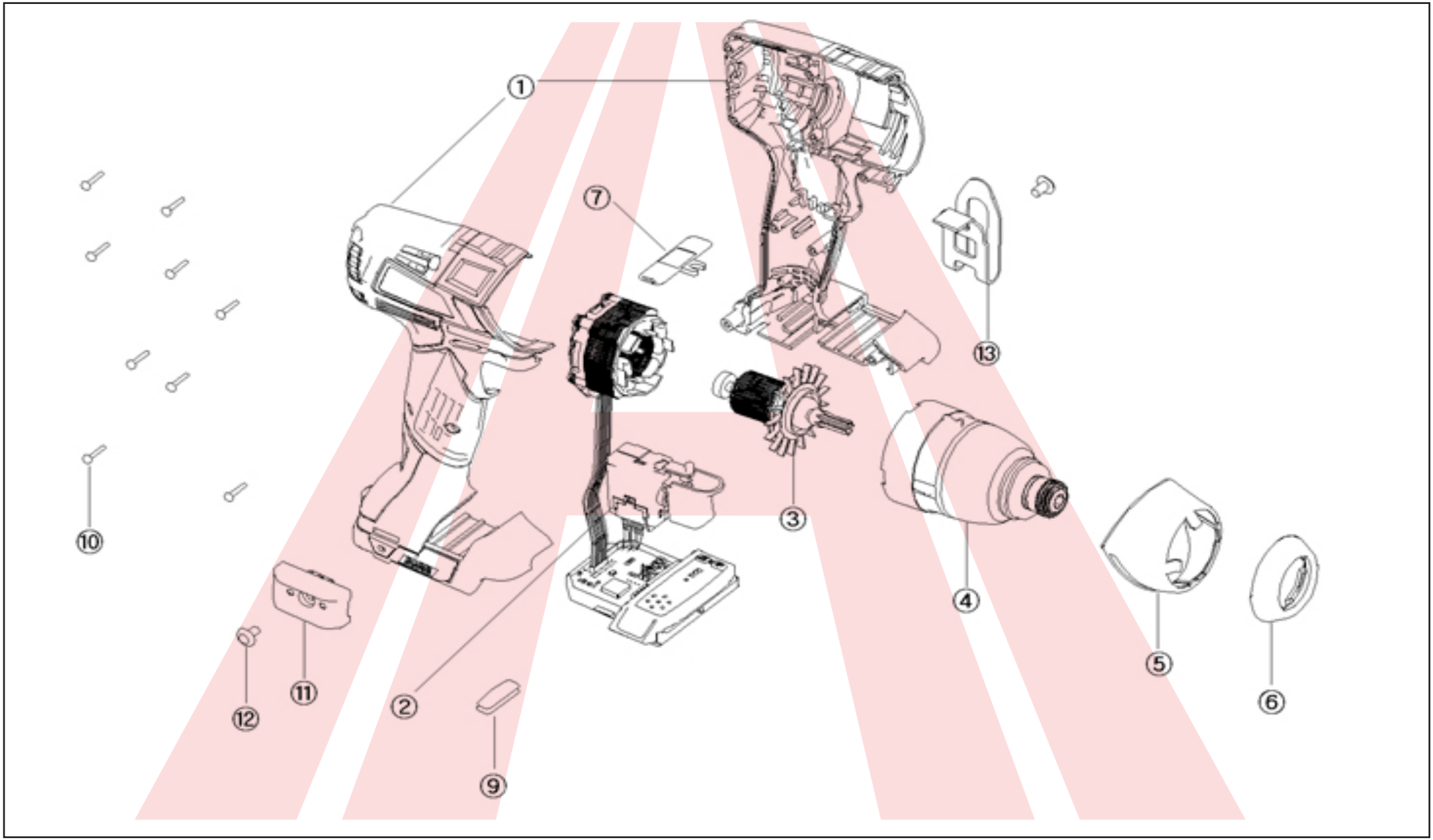

Name	Cordless impact wrench			Mark	HERMAN
Type	AXI-1800			Valid	1.1.2023
Exploded Wiew		Version	5002318	page	1/2

HERMAN

Item no.	Part no.	Description	Q'ty	RSP (EA)	Remark
1	2110720	HOUSING ASSY(R+L)	1		
2	2007437	CONTROLLER SUB ASSY,ID18BL	1		
2	7740666	INSTRUCTION MANUAL ID18BL	1		
3	3006017	ROTOR ASSY IW18BL	1		
4	3007006	IMPACT DRIVER GEARBOX ASSY, ID18BL	1		
5	2131794	GEAR BOX COVER,IW18BL	1		
6	2070094	RUBBER BUMPER ID18BL	1		
7	2115094	REVERSE KNOB, DIW-1801L	1		
8	3111922	BATTERY PACK ASSY ID18BL	2		
9	2075138	RUBBER DAMPER, DIW-1801L	1		
10	2030188	PAN HD TAP SCREW M3*14	9		
11	2418995	BIT HOLDER,ID18BL	1		
12	2406202	+TRUSS HD M/C SCREW(M4*8)	2		
13	2065246	HOOK, DIW-1801L	1		

Name	Cordless impact wrench			Mark	HERMAN
Type	AXI-1800			Valid	1.1.2023
Part List		Version	5002318	page	2/2